FENDER MODEL

"VIBRO-CHAMP AMP AA764" SCHEMATIC

THIS PRODUCT IS MANUFACTURED UNDER THE FOLLOWING U.S. PATENT: DES. 192859

1-FD

NOTICE

1 -VOLTAGES READ TO GROUND WITH ELECTRONIC VOLTMETER. VALUES SHOWN + OR − 20%
2 -ALL RESISTORS ½ WATT 10% TOLERANCE IF NOT SPECIFIED.
3 -ALL CAPACITORS AT LEAST 400 VOLT RATING IF NOT SPECIFIED.

INSTRUMENTS

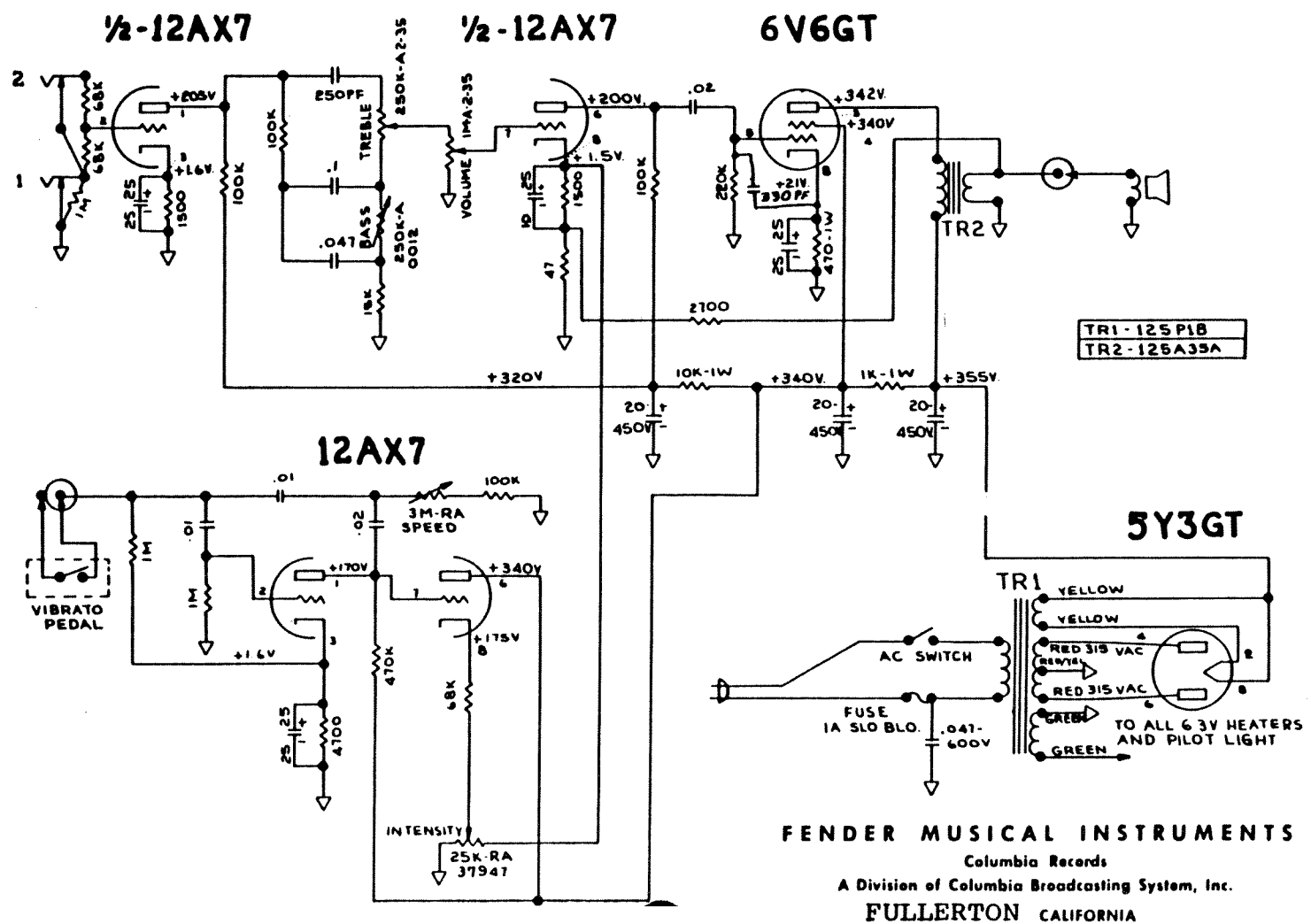

FENDER MUSICAL INSTRUMENTS
Columbia Records
A Division of Columbia Broadcasting System, Inc.
FULLERTON CALIFORNIA
U. S. A.

045401

FENDER MODEL "VIBRO-CHAMP-AMP AA764" LAYOUT

NOTICE

1- VOLTAGES READ TO GROUND WITH ELECTRONIC VOLTMETER VALUES SHOWN +OR- 20%
2- ALL RESISTORS 1/2 WATT 10% TOLERANCE IF NOT SPECIFIED
3- ALL CAPACITORS AT LEAST 400 VOLT RATING IF NOT SPECIFIED.

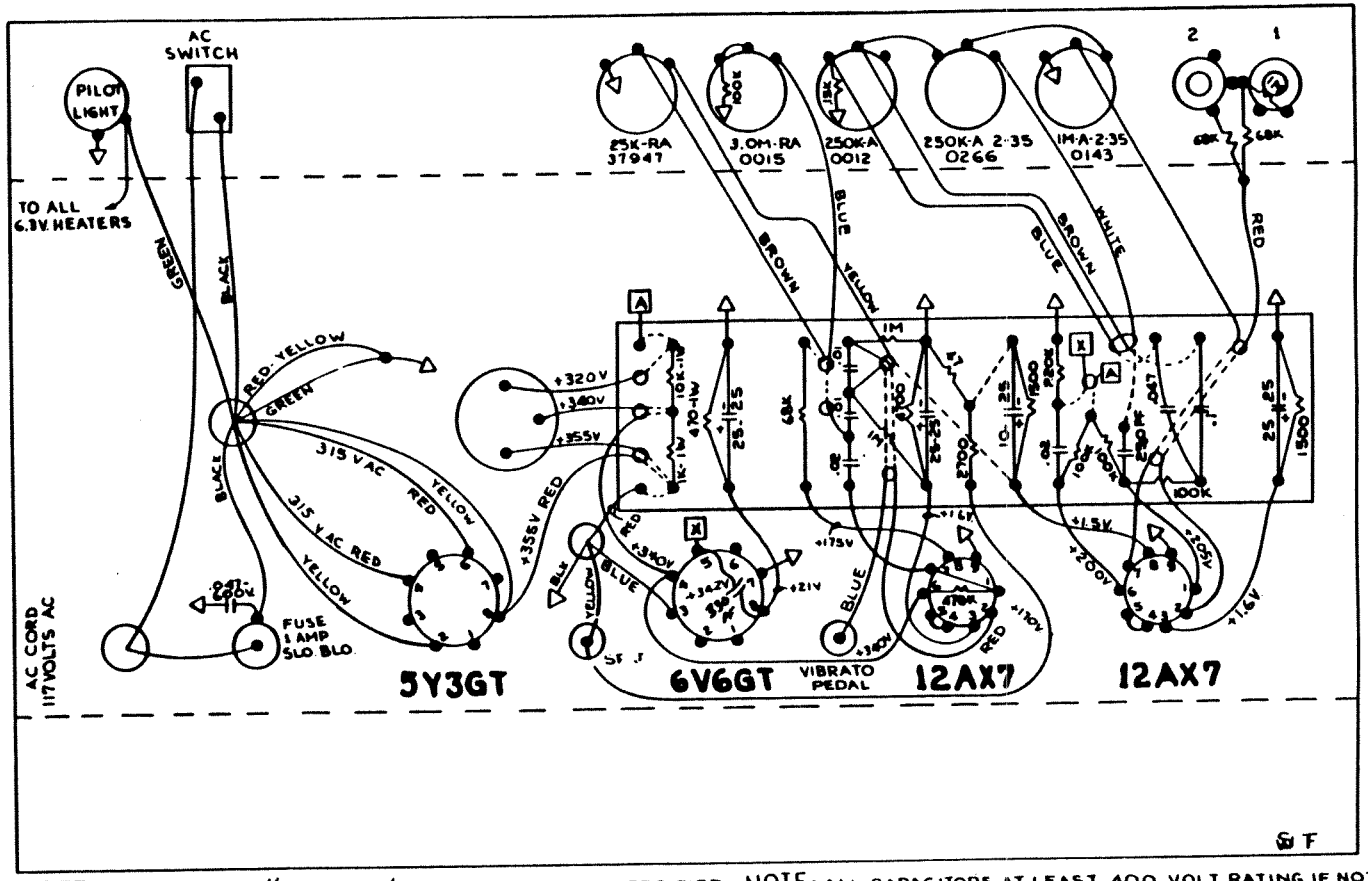

NOTE- ALL RESISTORS 1/2 WATT 10% TOLERANCE, IF NOT SPECIFIED NOTE- ALL CAPACITORS AT LEAST 400 VOLT RATING IF NOT SPECIFIED

FENDER MUSICAL INSTRUMENTS

Columbia Records

A Division of Columbia Broadcasting System, Inc.

FULLERTON CALIFORNIA

U. S. A.